Split

Dart Aerospace Ltd.

Date: Wednesday, 12/5/2007 8:00:16 AM
User: Kim Johnston

Process Sheet

Customer	: CU-DAR001 Dart Helicopters Services	Drawing Name	: MOUNTING BOLT
Job Number	: 36103		
Estimate Number	: 10134		
P.O. Number	: N/A	Part Number	: D2378
This Issue	: 12/5/2007 S.O. No. : N/A	Drawing Number	: D2378 REV A
Prsht Rev.	: NC	Project Number	: N/A
First Issue	: N/A Type : PURCHASED PARTS	Drawing Revision	: A
Previous Run	: 31885	Material	: N/A
Written By	:	Due Date	: 12/24/2007 Qty: ~~40~~ 25 ~~100~~ 100 Um: Each
Checked & Approved By	: 07.12 05		
Comment	: Est: B 99.05.10 Re-format DM		

Additional Product

Job Number:

Seq. #:	Machine Or Operation:	Description :
1.0	PG	PURCHASING
	Comment: PURCHASING Issue P/O: 5204 CL07/12/05 Purchase part as per Dwg D2378 ~~40~~ 100 Possible Supplier: KBC, Part Number: 1-908-401	
2.0	1908401	Mounting Bolt
	Comment: Qty.: 1.0000 Each(s)/Unit Total : 40.0000 Each(s) MOUNTING BOLT	
3.0	PACKAGING 1	PACKAGING RESOURCE #1
	Comment: PACKAGING RESOURCE #1 Receive and Inspect for transit damage 7/12/06 SP (25X)	
4.0	QC6	DIMENSIONAL CHECK
	Comment: DIMENSIONAL CHECK 07/12/07 (25)	
5.0	PACKAGING 1	PACKAGING RESOURCE #1
	Comment: PACKAGING RESOURCE #1 Identify and Stock Location: 31 7/12/10 SP (25X)	

Form: process

Dart Aerospace Ltd

W/O:		WORK ORDER CHANGES					
DATE	STEP	PROCEDURE CHANGE	By	Date	Qty	Approval Chief Eng / Prod Mgr	Approval QC Inspector

Part No: _____ PAR #: _____ Fault Category: _____ NCR: Yes (No) DQA: [illegible] Date: 01/12/11

QA: N/C Closed: _____ Date: _____

NCR:		WORK ORDER NON-CONFORMANCE (NCR)						
DATE	STEP	Description of NC Section A	Corrective Action Section B			Verification Section C	Approval Chief Eng	Approval QC Inspector
			Initial Chief Eng	Action Description Chief Eng	Sign & Date			

NOTE: Date & initial all entries

Date: Wednesday, 12/5/2007 8:00:16 AM
User: Kim Johnston

Process Sheet

Customer: CU-DAR001 Dart Helicopters Services

Drawing Name: MOUNTING BOLT

Job Number: 36103

Part Number: D2378

Job Number:

Seq. #:	Machine Or Operation:	Description :
6.0	QC21	FINAL INSPECTION/W/O RELEASE

(25)

Comment: FINAL INSPECTION/W/O RELEASE

Job Completion

2007/12/11 (25x)

Form: process

Dart Aerospace Ltd

W/O:		WORK ORDER CHANGES					
DATE	STEP	PROCEDURE CHANGE	By	Date	Qty	Approval Chief Eng / Prod Mgr	Approval QC Inspector

Part No: _____ PAR #: _____ Fault Category: _____ NCR: Yes No DQA: _____ Date: _____

QA: N/C Closed: _____ Date: _____

NCR:		WORK ORDER NON-CONFORMANCE (NCR)						
DATE	STEP	Description of NC Section A	Corrective Action Section B			Verification Section C	Approval Chief Eng	Approval QC Inspector
			Initial Chief Eng	Action Description Chief Eng	Sign & Date			

NOTE: Date & initial all entries

DESIGN	DRAWN BY	DART AEROSPACE LTD VICTORIA INTERNATIONAL AIRPORT, CANADA	
B WILLIAMS	K HAND		
CHECKED	APPROVED	DRAWING NO.	REV. A
		D2378	SHEET 1 OF 1
DATE		TITLE	SCALE
95:08:30		MOUNTING BOLT	1:1

SPECIFICATION CONTROL DRAWING

* THERMO-FORGED
* HEAT TREATED ALLOY STEEL
* UNIFIED 3A THREAD FIT
  MEETS ASME/ANSI B18.3

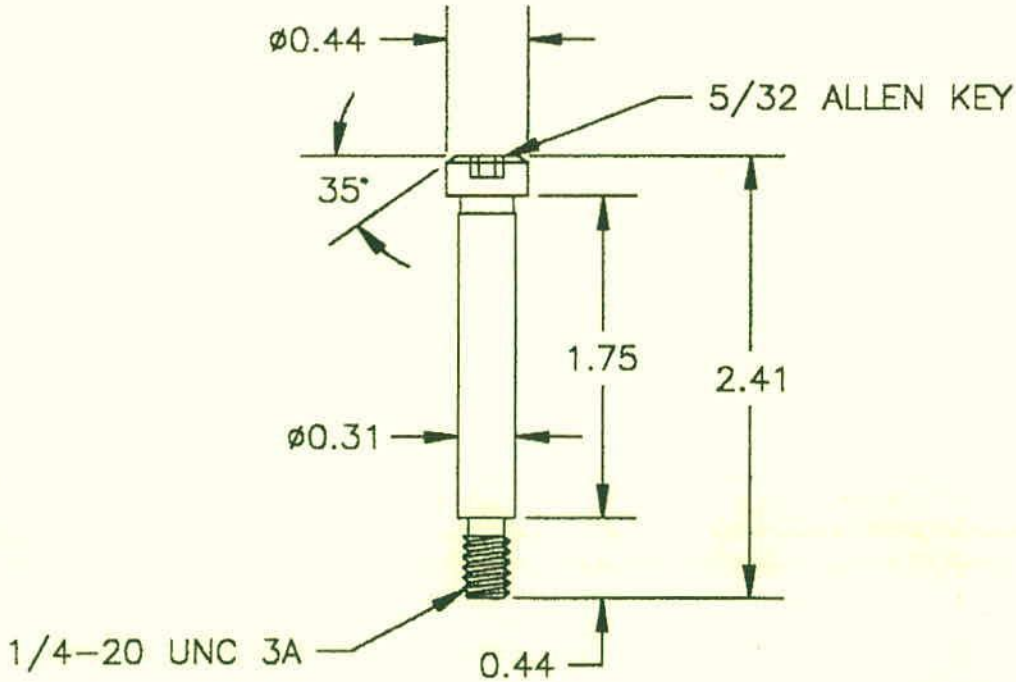

SHOP COPY
RETURN TO
ENGINEERING
UNCONTROLLED COPY
SUBJECT TO AMENDMENT
WITHOUT NOTICE
WORK ORDER
NO. 36103

SUPPLIERS:
KBC 1-908-401

DART

Purchase Order

Date	Page
Dec 05, 2007	1

Purchase Order Number
PO00005204

Dart Aerospace Ltd
1270 Aberdeen St
Hawksbury, Ontario K6A 1K7
Phone: **(613)632-9577**
Fax: **(613)632-1053**

REVISED

Vendor Address:
KBC Tools & Machinery
6150 Kennedy Road, Unit # 1
Mississauga, ON L5T 2J4
Canada
Phone (800) 561-6400
Fax (800) 668-5615

Ship To:
Main Finished Goods Location
Dart Aerospace Ltd
1270 Aberdeen St
Hawksbury, Ontario K6A 1K7

Reference	Contact	Vendor Number	PO Date	Terms	Ship Via	Expected Arriv.
		VC-KBC001	Dec 05, 2007	N30	Purolator	Dec 11, 2007

Qty. Ordered	Item Number	Description	Expected Arrival	Drop-Ship	Unit Cost	UOM	Extended Price
100.0000	1908401	Mounting Bolt Comments: AS PER DWG D2378 REV. A P/N: 1-908-401 B36103	12/11/2007	No	2.326700	Each	232.6

C Rev 25

1/12/08 SB

CERTIFICATE OF CONFORMITY REQ'D UPON DELIVERY

Comments:
REVISED: QTY

Tax Summary:

GST	13.96
GSTME	0.00
GSTND	0.00

Entered By: CL CLAVOIE

Approved By:

Less: included tax	0.00
Subtotal	232.67
Total tax	13.96
Total purchase order in CAD Dollars	246.63

- Machinery
- Power Tools
- Shop Supplies
- Toolroom Accessories

Tools & Machinery

North American Supplier"

SOLD TO

SHIPPED TO

SHIPPED TO

ORDER NO.	ORDER DATE	CUSTOMER ORDER NO.	TAX CD.	TERMS	MISC. MESSAGE

INVOICE NO.	INVOICE DATE	SHIP VIA	W / R	PHONE	SHIPPING CHARGES

OUR PART NUMBER	DESCRIPTION	ORDERED	SHIPPED	B / O	*
				75	

SHIP VIA	FILLED BY	PACKED BY	CHECKED BY	WEIGHT	ZONE	MEMO

File: ISO 9002 / forms reports checklists / new shipper / Revised April 19, 2001